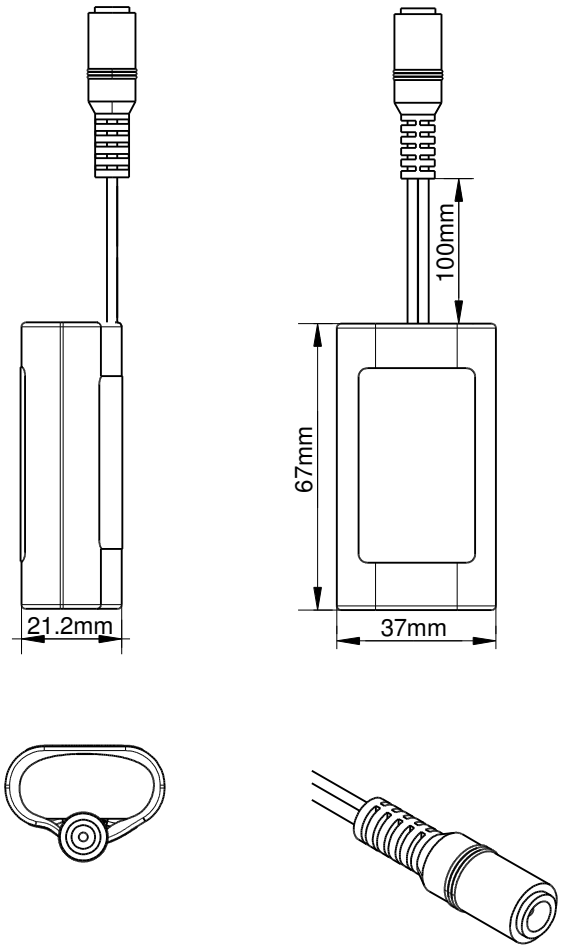


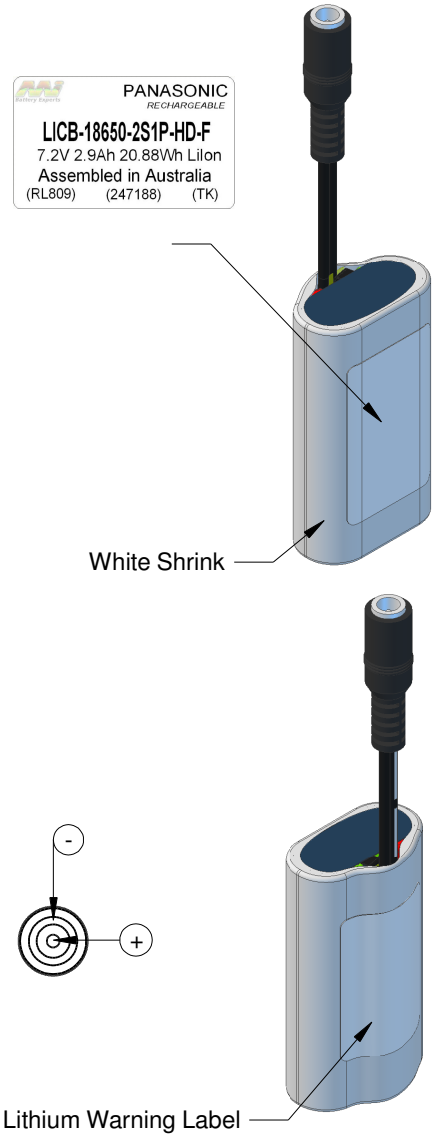


## Technical Data

| Safety Board (PCM) | |
|---|---|
| PCM | MIPCM-2SXP10A |
| Over Charge Detection Voltage | 4.26V ± 0.025V |
| Over Charge Release Voltage | 4.05V ± 0.05V |
| Over Discharge Detection Voltage | 2.40V ± 0.08V |
| Over Discharge Release Voltage | 3.0V ± 0.1V |
| Over Current Detection Current | 20A ± 2A |
| Max Discharge Current | 10A |
| Short Circuit Protection | External Short 200-500ms |
| Protection Circuit Resistance | ≤30mΩ |
| PTC Resettable Fuse | N/A |
| Thermistor | N/A |
| Chemistry | LiIon |
| Configuration | 2S1P |
| Voltage | 3.7V |
| Capacity | 2750mAh |
| Energy | 2.8Wh |
| Weight | 108g |
| Rated Discharge | 540mA (C/5) |
| Max Discharge Continuous | PCM: 10A |
| | Cell: 10A |
| Charge Rate | 1.35A |
| Operating Temperature Range | Charge: 10 - 40℃ |
| | Discharge: -20 - 60℃ |
| Charge Voltage | 4.2V |
| Discharge End Voltage | 2.5V |
| Connector | CE180 2.1mmID x 5.5mmOD DC Jack |
| Suits Mating Connector | P4215 DC Plug Male 2.1mmID x 5.5mmOD Jack |

Master Instruments

This drawing and the designs so represented are the copyright property of Master Instruments Pty Ltd. The drawing shall not be copied, loaned or issued without the express written permission of a duly authorised representative of Master Instruments Pty Ltd.

| | | | | | |
|---|---|---|---|---|---|
| PART NO | RL809 | STOCK CODE | 88003-106 | RevNo | 0 |
| | | | | DATE | 27/01/16 |
| CELL TYPE | NCR18650PF | RECOMMENDED CHARGER | 3P10-L1008-2.1mm or FY0852000 | PAGE | 1 OF 1 |