Rechargeable Sealed Lead-Acid Battery

PS-1238

12 Volt 3.8 Amp. Hrs.

Features:

- Absorbent Glass Mat (AGM) technology for superior performance.
- Valve regulated, spill proof construction allows safe operation in any position.
- Power/volume ratio yielding unrivaled energy density.
- Rugged ABS plastic case and cover
- Approved for transport by air. D.O.T., I.A.T.A., F.A.A. and C.A.B. certified.
- U.L. recognized under file number MH 20845.

PERFORMANCE SPECIFICATIONS

Nominal Voltage ..... 12 volts (6 cells in series)

Nominal Capacity

20 hour rate (190mA to 10.50 volts)	3.80 A.H.
10 hour rate (350mA to 10.50 volts)	3.50 A.H.
5 hour rate (640mA to 10.20 volts)	3.20 A.H.
1 hour rate (2.40A to 9.00 volts)	2.40 A.H.
15 min rate (7.40A to 9.00 volts)	1.80 A.H.

Approximate Weight ..... 3.75 pounds (1.70 kg)

Energy Density (20 hour rate) ..... 1.16 Watt-hours/cubic inch (71.1 Watt-hours/l)

Specific Energy (20 hour rate) ..... 12.2 Watt-hours/pound (26.8 Watt-hours/kg)

Internal Resistance (Fully Charged Battery) ..... 32 milliohms (approximately)

Maximum Discharge Current (≤ 7 Min.) ..... 12 amperes

Maximum Short-Duration Discharge Current (≤ 10 Sec.) ..... 38 amperes

Terminals ..... "F1": Quick disconnect tabs, 0.187" x 0.032", Mate with AMP. INC FASTON "187" series

Shelf Life — % of nominal capacity at 68° F (20° C)

1 Month	97%
3 Months	91%
6 Months	83%

Operating Temperature Range

Charge ..... -4°F (-20°C) to 122°F (50°C)

Discharge ..... -4°F (-20°C) to 140°F (60°C)

Case ..... ABS Plastic

Shelf Life and Storage

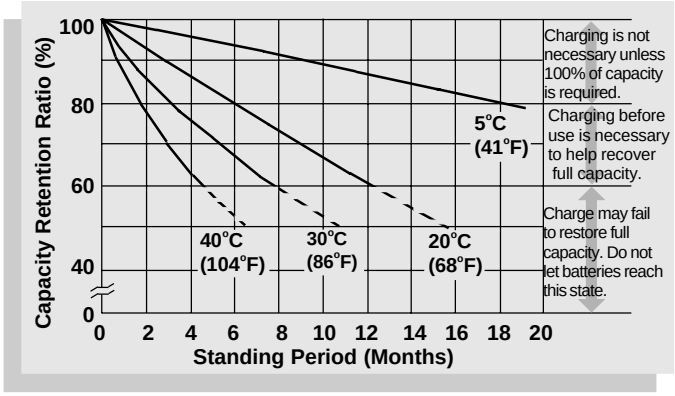

Discharge Characteristics

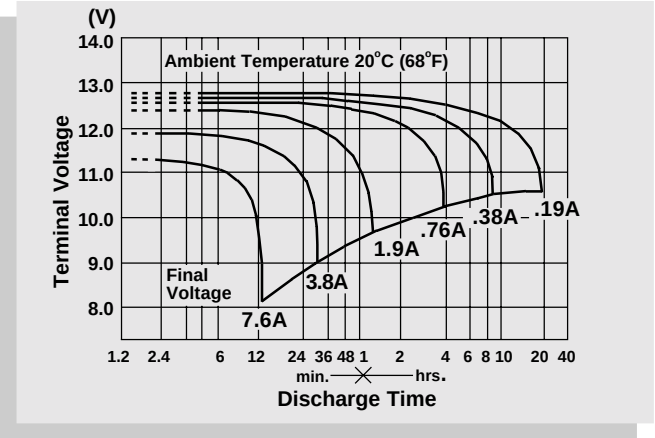

Life Characteristics in Stand-By Use

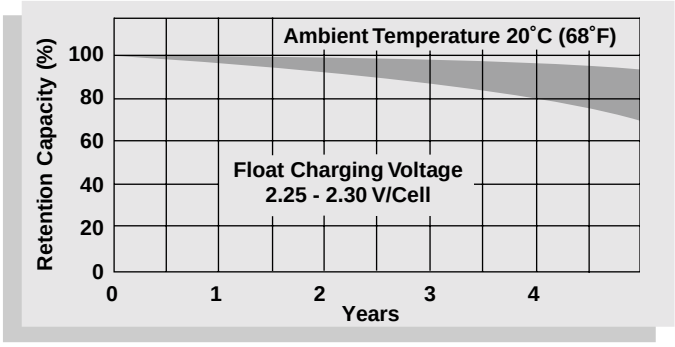

Discharge Time vs. Discharge Current

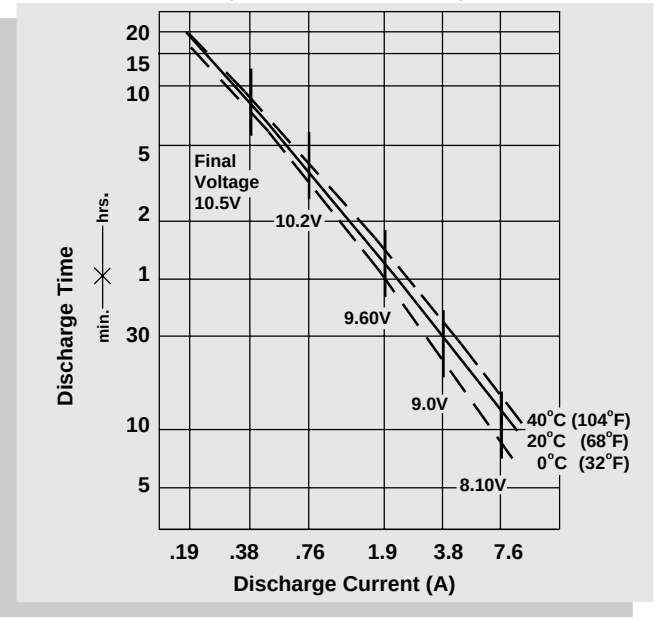

Life Characteristics in Cyclic Use

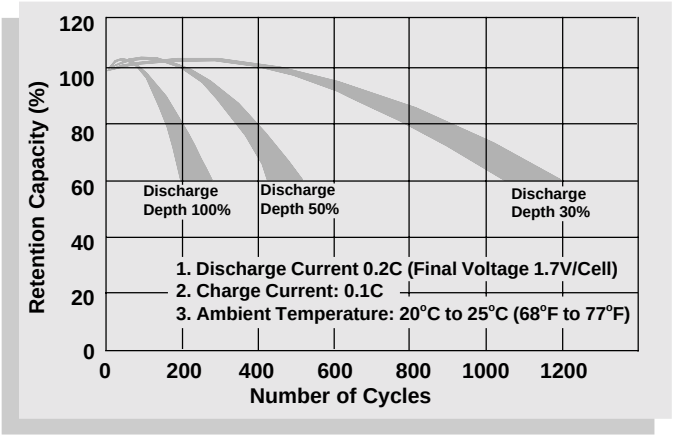

Physical Dimensions: in. (mm) Terminals: F1 (mm)

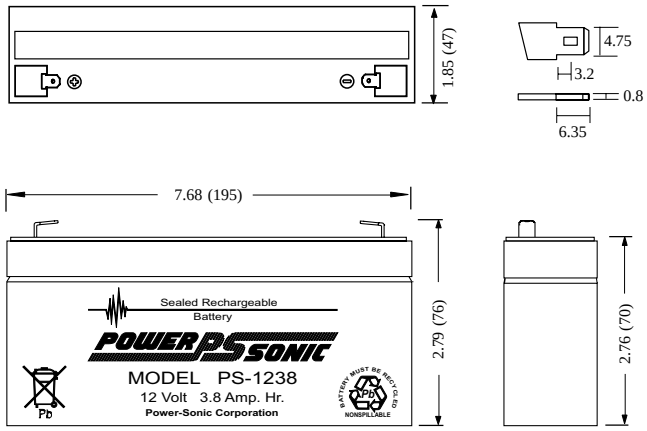

Tolerances are +/- 0.04 in. (+/- 1mm) and +/- 0.08 in. (+/- 2mm) for height dimensions.
All data subject to change without notice.

CHARGING

Cycle Applications: Limit initial current to 1.2A. Charge until battery voltage (under charge) reaches 14.40 to 14.70 volts at 68°F (20°C). Hold at 14.40 to 14.70 volts until current drops to approximately 38mA. Battery is fully charged under these conditions, and charger should either be disconnected or switched to "float" voltage.

"Float" or "Stand-By" Service: Hold battery across constant voltage source of 13.50 to 13.80 volts continuously. When held at this voltage, the battery will seek its own current level and maintain itself in a fully charged condition.

NOTE: Due to the self-discharge characteristics of this type of battery, it is imperative that they be charged after 6-9 months of storage, otherwise permanent loss of capacity might occur as a result of sulfation.

POWER SONIC

SALES & MARKETING
3106 Spring Street
Redwood City, CA 94063 USA
Tel: 650-364-5001 Fax: 650-366-3662
national-sales@power-sonic.com

ISO9001-2000
FM39170

www.power-sonic.com

CUSTOMER SERVICE
7550 Panasonic Way
San Diego, CA 92154 USA
Tel: 619-661-2030 Fax: 619-661-3648
customer-service@power-sonic.com

PRINTED IN U.S.A.

12/05 1M