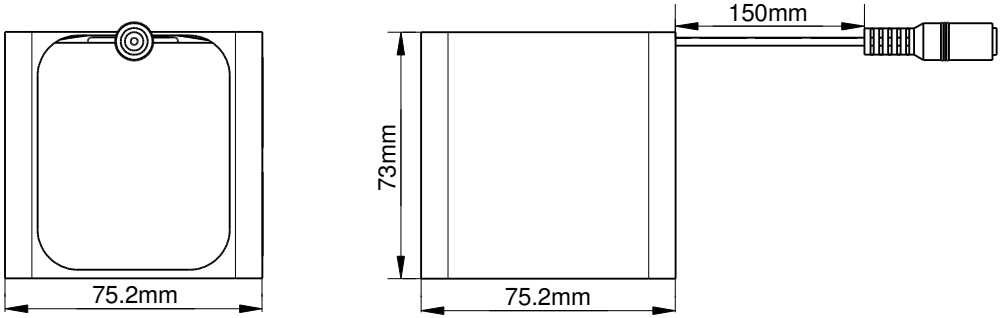

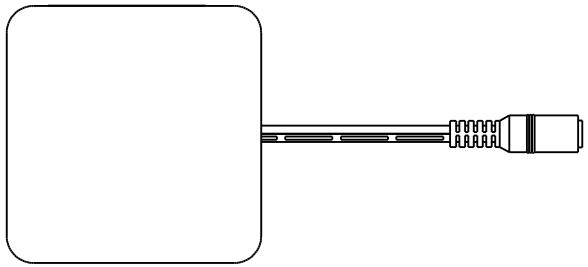

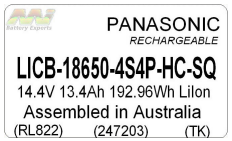

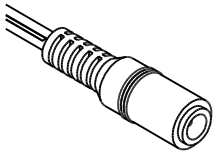

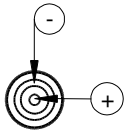

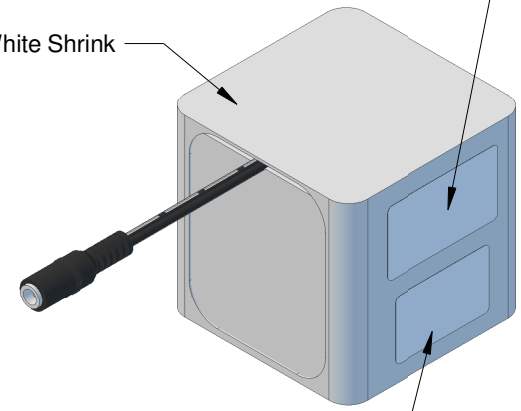

Technical Data	
Safety Board (PCM)	
PCM	MIPCM-4SXP7ANTC
Over Charge Detection Voltage	4.35V ± 0.025V
Over Charge Release Voltage	4.25V ± 0.025V
Over Discharge Detection Voltage	2.30V ± 0.10V
Over Discharge Release Voltage	3.0V ± 0.15V
Over Current Detection Current	<7.5A
Max Discharge Current	7A
Short Circuit Protection	Open Loop
Protection Circuit Resistance	≤25mΩ
PTC Resettable Fuse	N/A
Thermistor	N/A
Chemistry	LiIon
Configuration	4S4P
Voltage	14.4V
Capacity	13.4Ah
Energy	192.96Wh
Weight	800g
Rated Discharge	2.68A (C/5)
Max Discharge Continuous	PCM: 7A
	Cell: 7A (PCM Limit)
Charge Rate	6.5A
Operating Temperature Range	Charge: 10 - 45℃
	Discharge: -20 - 60℃
Charge Voltage	16.8V
Discharge End Voltage	12V
Connector	CE180 2.1mm(ID) x 5.5mm(OD) DC Plug
Suits Mating Connector	P4215 DC Plug Male 2.1mm(ID) x 5.5mm(OD) Jack

Master Instruments

This drawing and the designs so represented are the copyright property of Master Instruments Pty Ltd. The drawing shall not be copied, loaned or issued without the express written permission of a duly authorised representative of Master Instruments Pty Ltd.

PART NO	RL822	STOCK CODE	88003-119	RevNo	0
CELL TYPE	NCR18650B	RECOMMENDED CHARGER	3P10-L1016 or FY170XXXX	DATE	10/02/16
				PAGE	1 OF 1