INSTRUCTION MANUAL

RRC2020



Picture only for reference

Deutsch	Bedienungsanleitung	3
English	Instruction manual	4
Български	Ръководство за употреба	5
Česky	Návod k obsluze	6
中国	使用说明书	7
中國	使用說明書	8
Dansk	Betjeningsvejledning	9
Eesti keel	Kasutusjuhend	10
Ελληνικά	Εγχειρίδιο χρήσης	11
Español	Manual de empleo	12
Français	Manuel d'utilisation	13
हिंदी	ऑपरेटिंग मैन्युअल	14
Hrvatski	Upute za uporabu	15
Italiano	Istruzioni d'uso	16
日本人	取扱説明書	17
한국	사용설명서	18
Latviski	Lietošanas instrukcija	19
Lietuviškai	Naudojimo instrukcija	20
Magyar	Használati utasítás	21
Nederlands	Gebruiksaanwijzing	22
Norsk	Bruksanvisning	23
Português	Manual de instruções	24
Polski	Instrukcja obsługi	25
Română	Instrucţiuni de utilizare	26
Русский	Руководство по эксплуатации	27
Slovenský	Návod na obsluhu	28
Slovenščina	Navodila za uporabo	29
Suomi	Käyttöohje	30
Svenska	Bruksanvisning	31
ภาษาไทย	คู่มือแนะนำการใช้งาน	32

Recycling Information 33

Talk to our engineers +61 2 9519 1200 · info@mibattery.com.au · mibattery.com.au

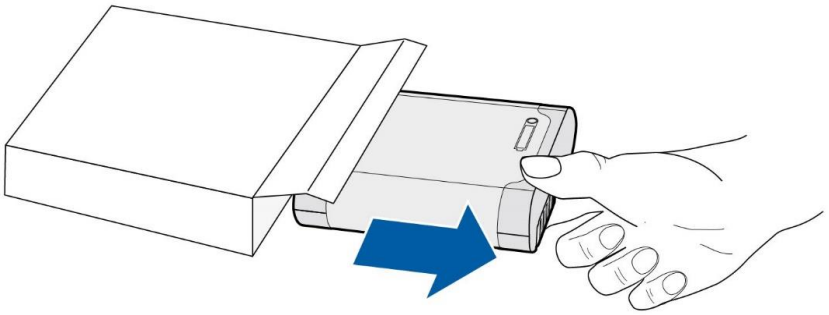

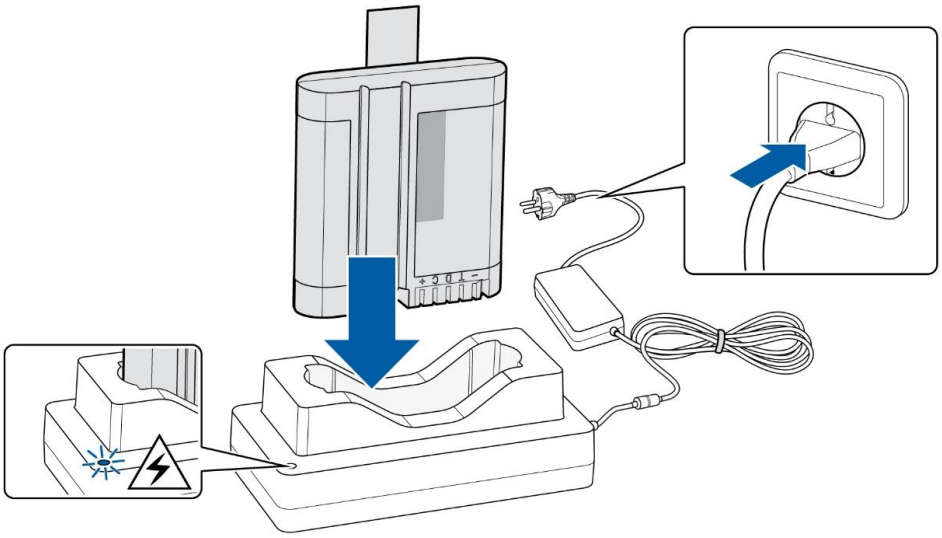

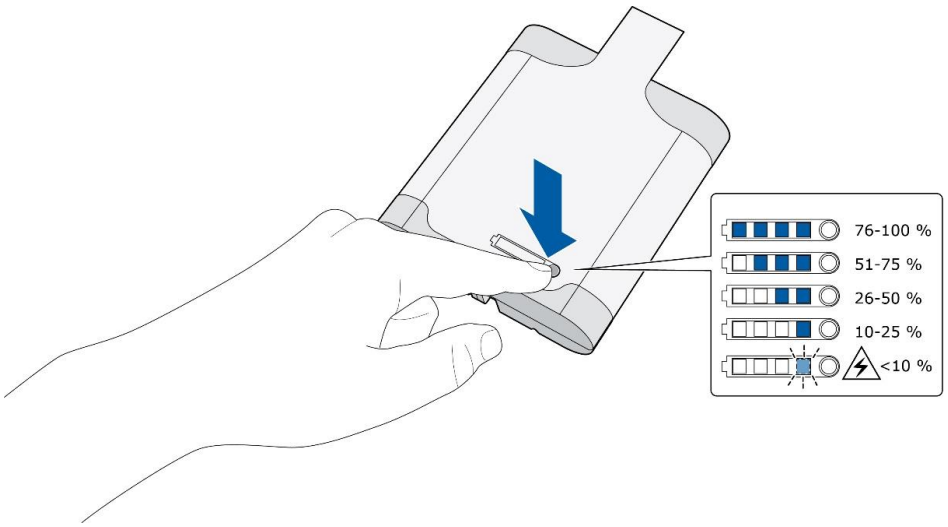

Talk to our engineers +61 2 9519 1200 · info@mibattery.com.au · mibattery.com.au

English Instruction manual

This manual contains instructions for use and important safety information. Read the instructions carefully before using the product.

Safety:

- Do not open or dismantle a battery.
- Do not expose the battery to heat or fire. Avoid storage in direct sunlight.
- Do not short-circuit a battery.
- Do not store the battery haphazardly in a box or drawer where they may short-circuit each other or be short-circuited by other metal objects.
- Do not remove a battery from its original packaging until required for use.
- Do not subject the battery to mechanical shock.
- In the event of a battery leaking, do not allow the liquid to come in contact with the skin or eyes. If contact has been made, wash the affected area with copious amounts of water and seek medical advice.
- Do not use any charger other than that specifically provided for use with the equipment. See also chapter "Charging".
- Observe the plus (+) and minus (–) marks on battery and equipment and ensure correct use.
- Do not mix batteries of different manufacture, capacity, size or type within a device.
- Keep the battery out of the reach of children.
- Keep the battery clean and dry.
- The battery needs to be charged before use.
- Use only the battery in the application for which it was intended.
- When possible, remove the battery from the equipment when not in use.
- Do not store a battery longer than 1 month in a discharged state.
- Do not storage a battery longer than 1 year without recharge.
- The battery must be recycled or disposed of properly.

Operating Temperature:		**Storage Temperature:**	
For charge:	0°C to +45°C	< 1 year:	-20°C to +20°C
For discharge:	-20°C to +60°C	< 3 months:	-20°C to +45°C
		< 1 month:	-20°C to +50°C

Recommendation: Store the battery at below 20°C, low humidity, no dust and no corrosive gas atmosphere. Store the battery with a state of charge between 40-60%.

Charging: Charge only with a SMBUS compliant charger, e.g. RRC-SMB-UBC. Refer also to the manufacturer's instructions or equipment manual for proper charging instructions.

Specifications:

Type	RRC2020
Voltage	10.80V
Capacity	9.22Ah
Max. charge current	6.20A
Max. charge voltage	12.55V
Max. discharge current	10.00A
Dimensions (L x W x H)	149.7mm x 89.25mm x 20.1mm (max.)
Weight	505g

Recycling: Recycle batteries according to national and local regulations. Contact your local representative for assistance. The batteries must be disposed only in a discharged state at the collection center. In case the battery is not fully discharged, provide for a risk against short circuits. Short circuits can be prevented by isolating the terminals with tape.

Declaration of conformity:
CE: The battery complies with the current regulations of the EU guidelines.
FCC: This device complies with part 15 of the FCC Rules. Operation is subject to the following two conditions: (1) This device may not cause harmful interference, and (2) this device must accept any interference received, including interference that may cause undesired operation.

Symbols: Explanation of symbols that are on the battery and/or in this manual.

	Caution, consult accompanying documents		Operator's manual; operating instructions
	Mark of conformity to applicable European Directives		Japan, PSE
	United Kingdom, UKCA		Thailand, TISI
	Russia, GOST-R		Morocco, CMIM
	Canada and USA, UL		UN Transportation Test
	Australia and New Zealand, RCM		Dispose of this product according to local regulations.
	China, CCC		Recycling Symbol
	India, BIS		Taiwan, Recycling Symbol
	Korea, KC		China, RoHS
	Taiwan, BSMI		For Canada & USA: Please call 1-800-822-8837 for information on how to recycle this battery

Talk to our engineers +61 2 9519 1200 · info@mibattery.com.au · mibattery.com.au

Recycling Information RRC2020

Material	Packaging component
LDPE 4 	PE-Bag 
PAP 20 	Single Box 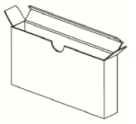
	Outer Box Guide 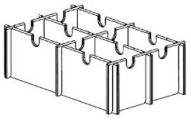
	Outer Box 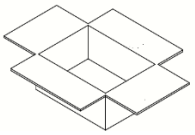
	Upper Outer Box Pad 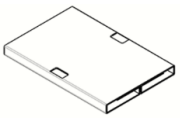
	Bottom Outer Box Pad 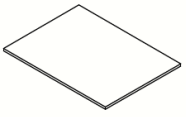

Pictures only for reference

Talk to our engineers +61 2 9519 1200 · info@mibattery.com.au · mibattery.com.au