RRC-MC20-90-10

Battery Mating Connector

P/N: 210519

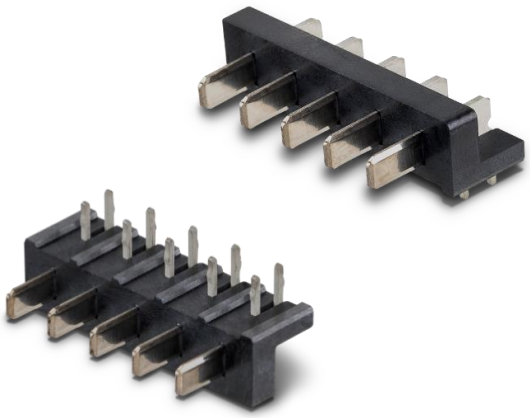

Features:

- Mating connector for standard battery form factors RRC20xx
- 10.00A max. charge or discharge current to battery
- 5-pin male connector
- 5mm pitch
- RoHS and REACH compliant

Applications:

Mating connector for RRC's smart batteries used in medical, industrial and consumer applications

Talk to our engineers +61 2 9519 1200 · info@mibattery.com.au · mibattery.com.au

Specification

Ratings	
Current	10.00A max. / pin
Voltage	125.00VAC / 1min

Materials	
Housing	Thermoplastic High Temperature, UL 94 V-0, black
Contacts	Copper Alloy
Plating	80µin Nickel on contact area, 100µin Matte-Tin on solder tails

Environmental Condition	
Operating Temperature	-55°C to +105°C

Electrical Requirements	
Contact Resistance	30mOhm max.
Insulation Resistance	100mOhm min. at 500VDC / 2min
Dielectric withstand	500.00V

Mechanical Requirements	
Dimensions (LxWxH)	27mm x 13.70mm x 9.90mm
Weight	Typical 3g
PCB mounting	90°
Contact Retention Force	500g min. / pin
Durability	5000 cycles

Physical Requirements	
Solder Temperature	260°C ± 5°C
Immersion Period	5sec (EIA-364-56C)

Regulatory Approvals	
Green Procurement	RoHS REACH

Packaging
22 connectors per tube
77 tubes per carton

Talk to our engineers +61 2 9519 1200 · info@mibattery.com.au · mibattery.com.au

Drawings

All dimension are provided in mm.

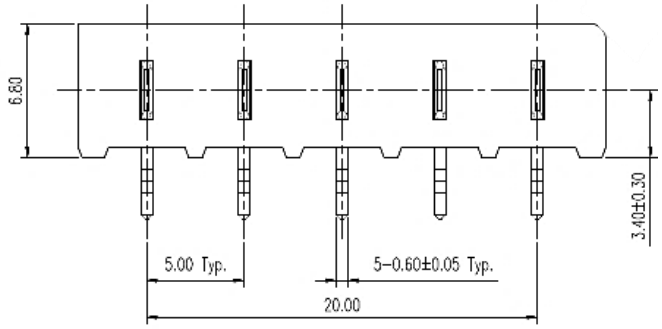

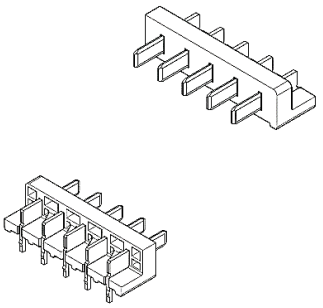

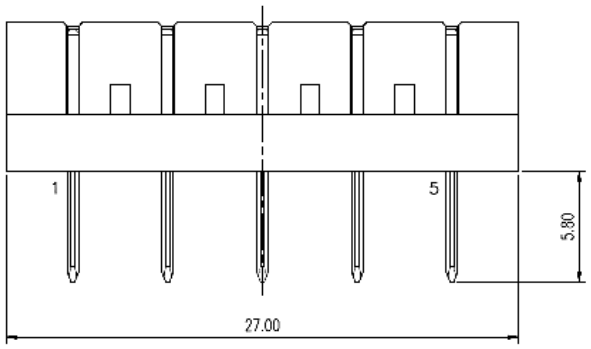

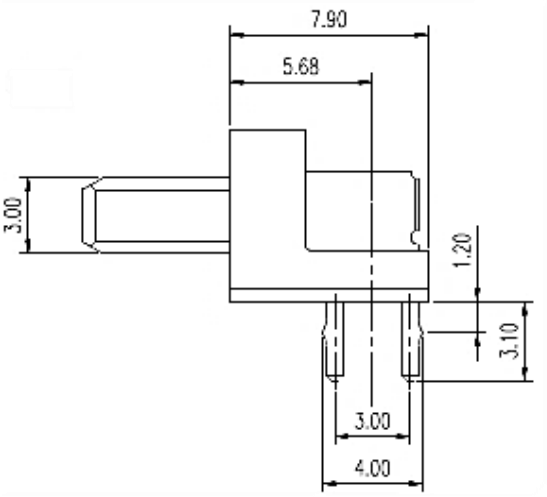

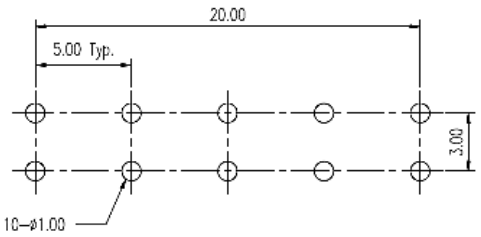

All dimensions in mm.

Tolerance (unless otherwise specified)	
X.	X.° ± 10°
X.X ± 0.38	X.X° ± 5°
X.XX ± 0.25	X.XX° ± 2°
X.XXX ± 0.13	X.XXX°

Germany/HQ
RRC power solutions GmbH

Technologiepark 1
66424 Homburg / Saar

+49 6841 98090
sales@rrc-ps.com

USA
RRC power solutions Inc.

18340 Yorba Linda Blvd.,
107-437
Yorba Linda, CA 92886

+1 714 777 3604
usa@rrc-ps.com

Hong Kong
RRC power solutions Ltd.

S-V,6/F, Valiant Industrial Centre 2-12
Au Pui Wan Street
Fo Tan, N.T., Hong Kong

+852 2376 0106
hkrrc@rrc-ps.cn

China
RRC power solutions Ltd.

Room 1306, C Building, Tianan International Building, Renmin South Road, Luohu District, Shenzhen 518021

+86 755 8374 1908
hkrrc@rrc-ps.cn

Vietnam
RRC Power Solutions Company Ltd.

Block C, Lot CN4
Dinh Vu – Cat Hai Economic Zone,
Dong Hai 2 Ward
Hai An District 180000
Hai Phong City

vietnam@rrc-ps.com

Talk to our engineers +61 2 9519 1200 · info@mibattery.com.au · mibattery.com.au